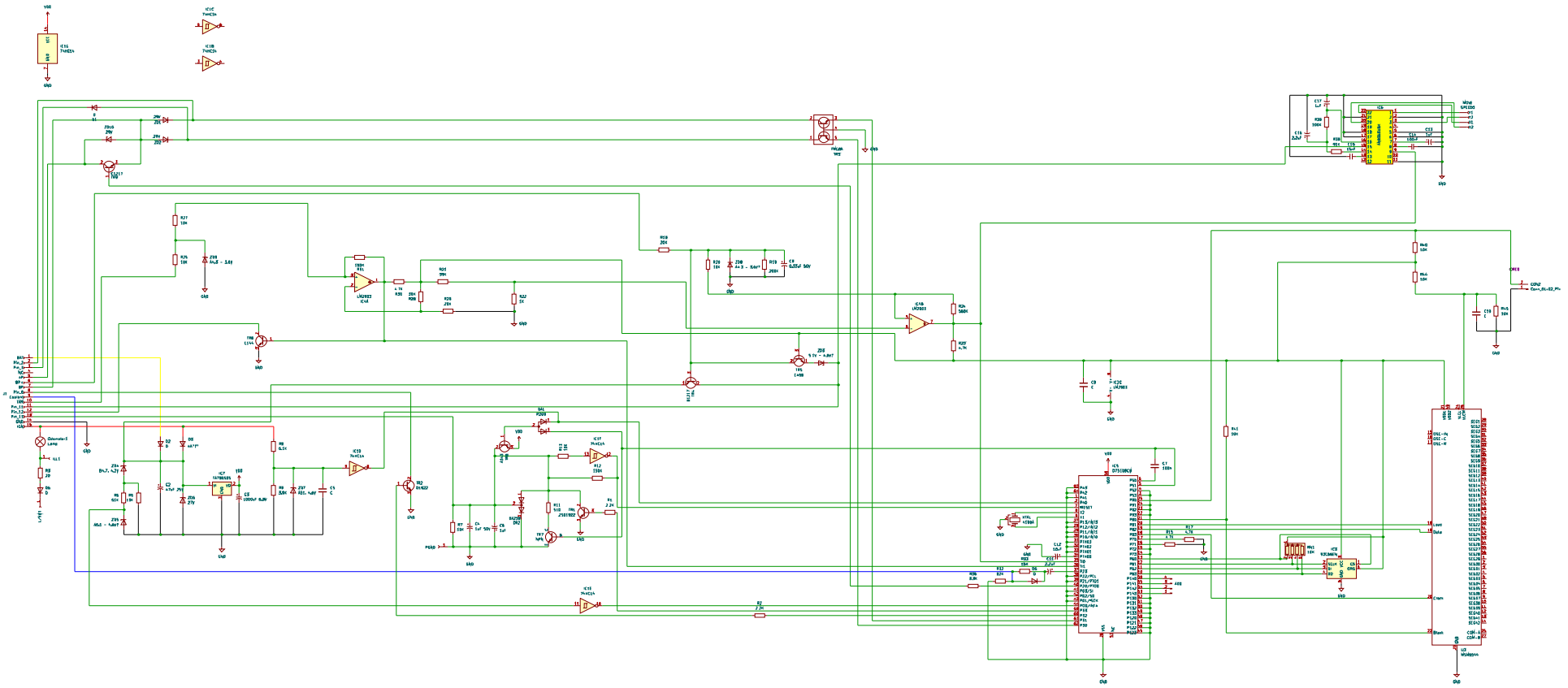Wire Mount Matrix EV7 Instrument Cluster Speedometer Schematic
Based on Eurocar Computer
Contact consumerengineer@hotmail.com for corrections or corrections.
This is a slightly cleaned up version of an original. It is possible that errors were created when producing this more readable version. Contact me and I will check against the original.
IMPORTANT NOTE: Pin numbers are as shown from the Fairchild Printed Circuit connector side of the board. Other schematics may use different number schemes