## 5010 REAR BUMPER

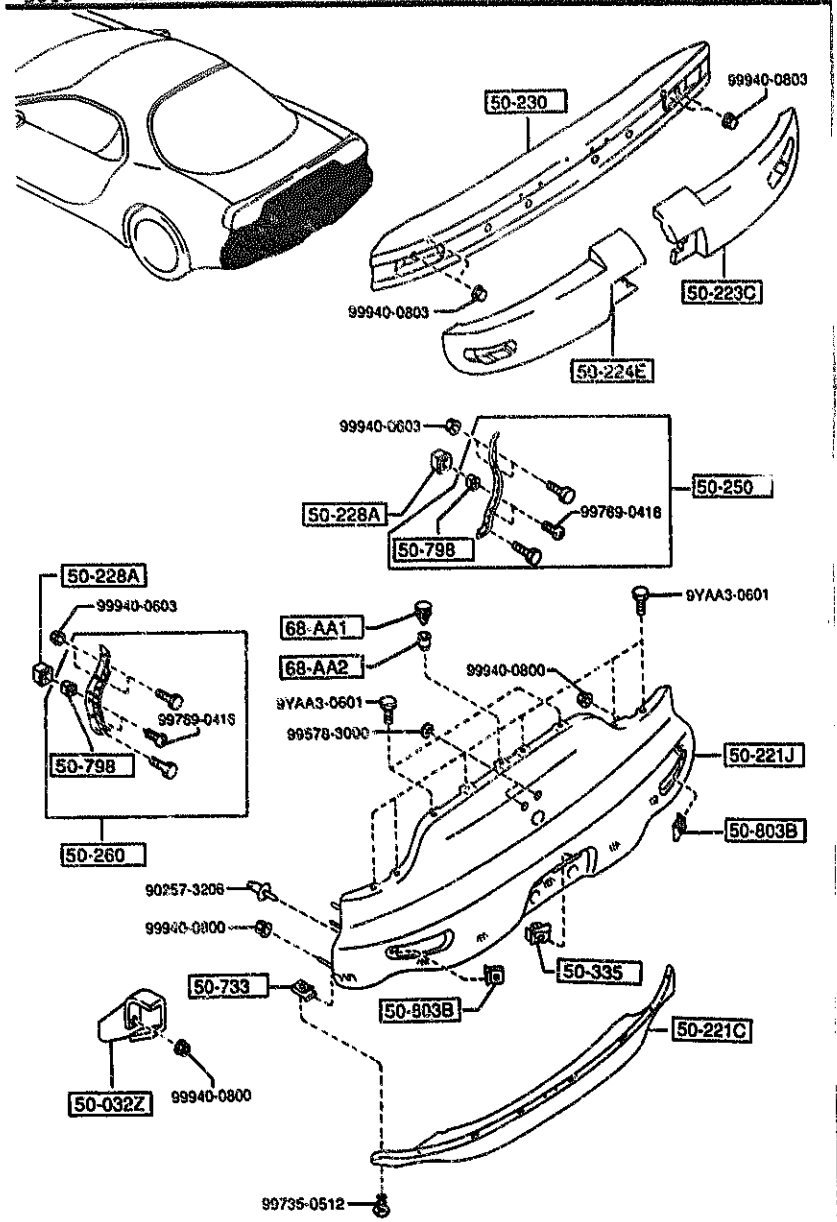


| PART NO. | QTY | MODEL/RESTRICTION | MODEL/RESTRICTION | MODEL/RESTRICTION | FROM-TO |
|---|---|---|---|---|---|
| 68-AA1 | | FASTENER | | | |
| LA10-68-AA1 | 1 | | | | |
| 68-AA2 | | FASTENER,SEAL-TRIM | | | |
| LA10-68-AA2 | 1 | | | | |