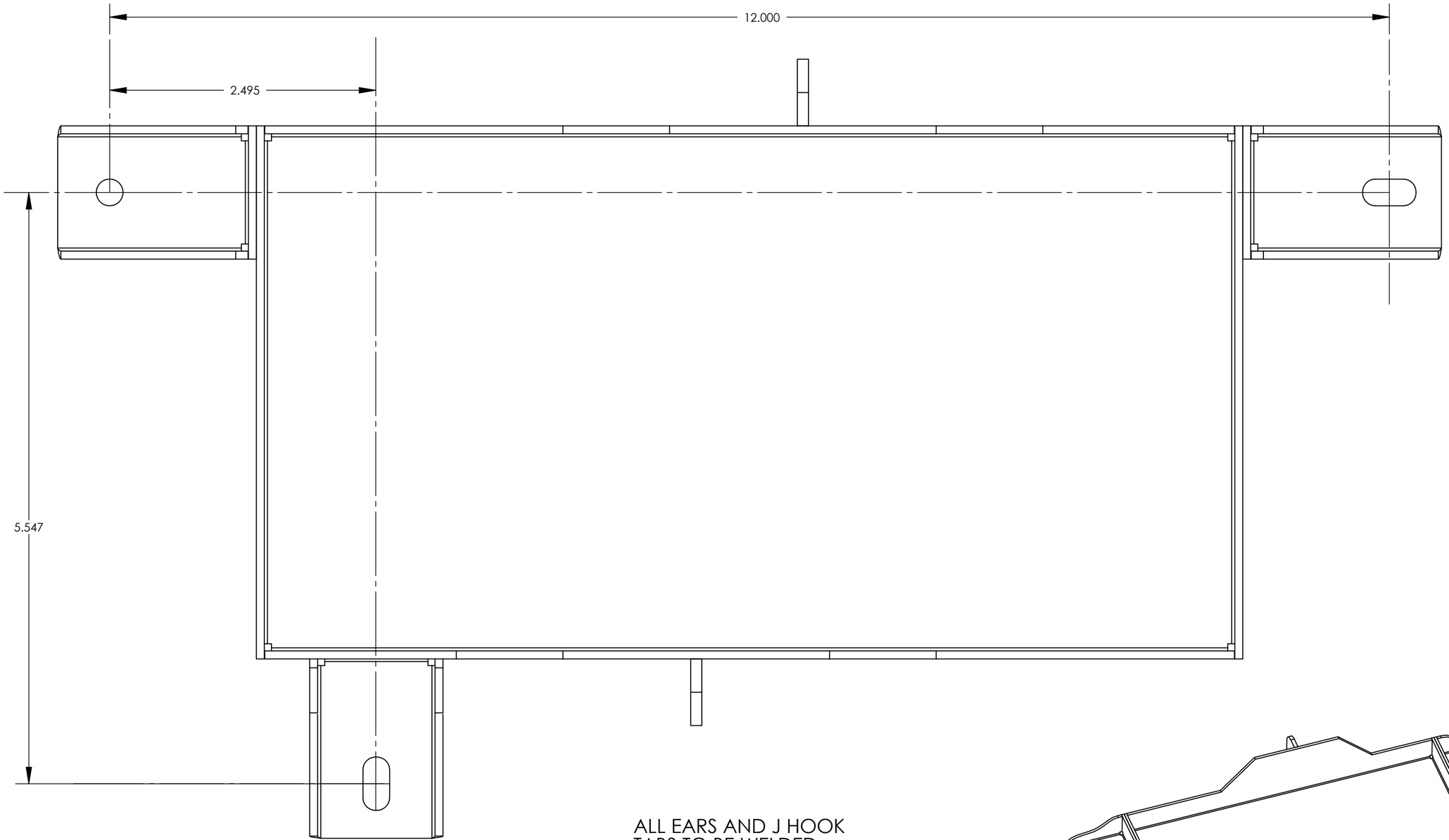
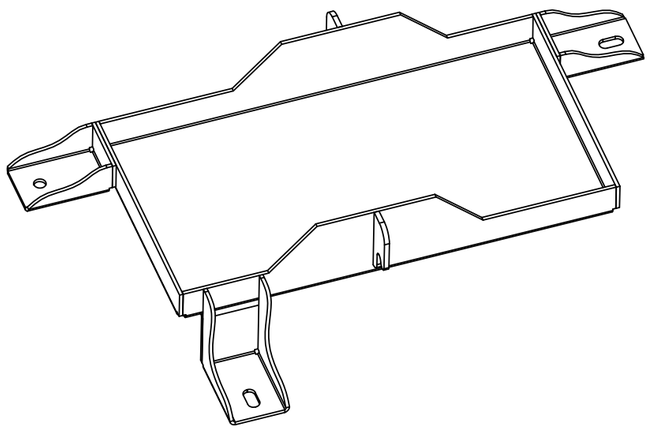
ALL EARS AND J HOOK
TABS TO BE WELDED
TO THE MAIN TRAY